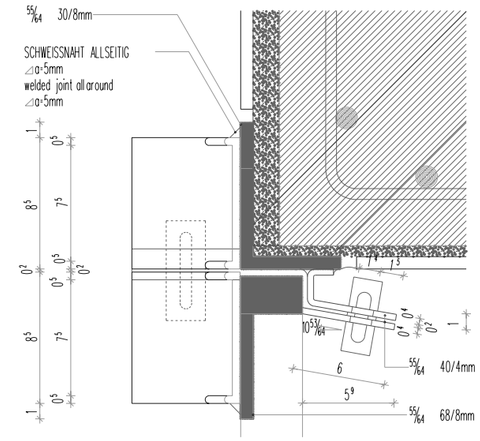

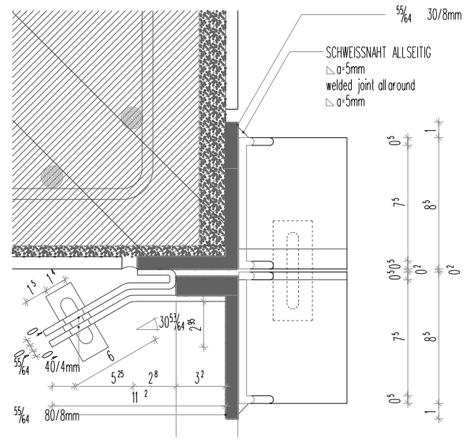

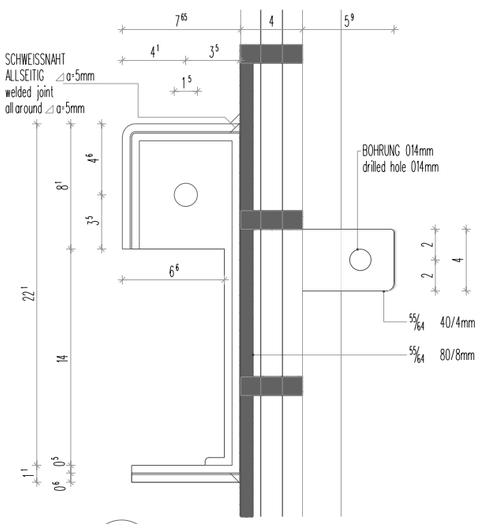

C A24 A24 DETAIL 1:2
DETAIL

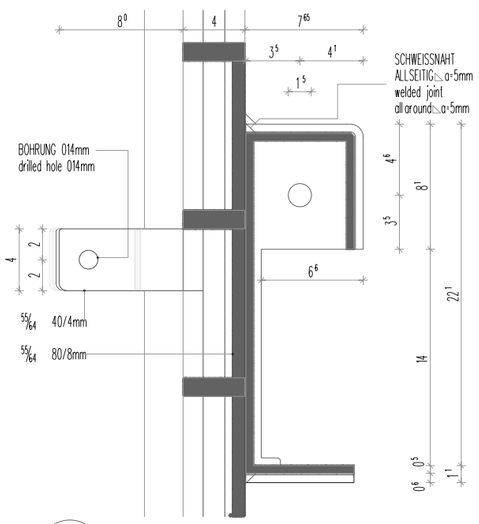

D A24 A24 DETAIL 1:2
DETAIL

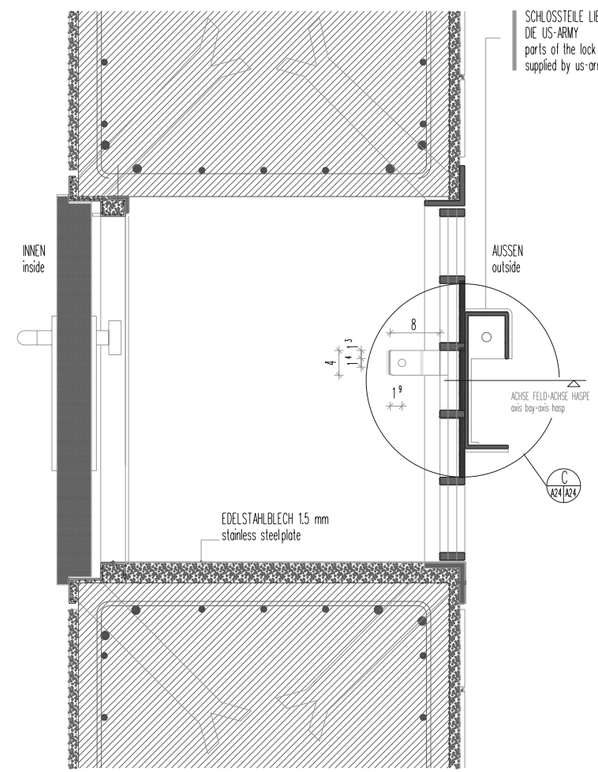

2 A23 A24 DETAIL 1:5
DETAIL

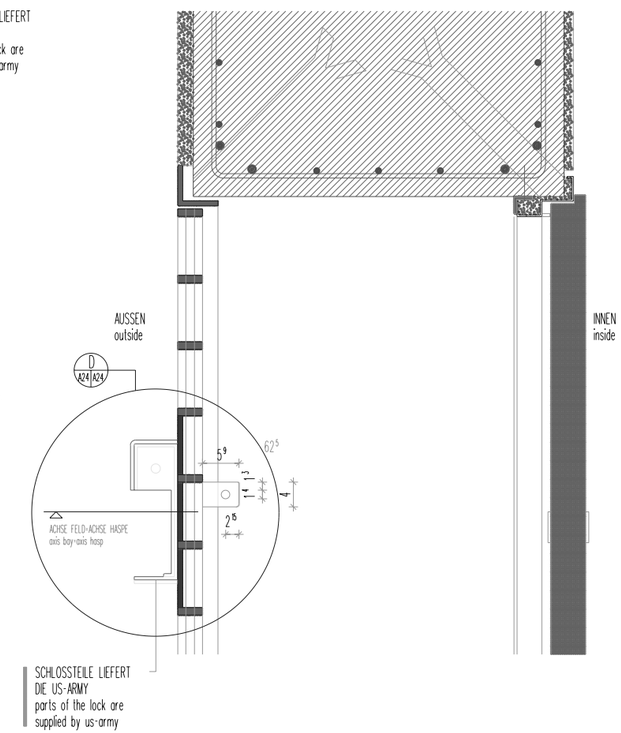

1 A23 A24 DETAIL 1:5
DETAIL

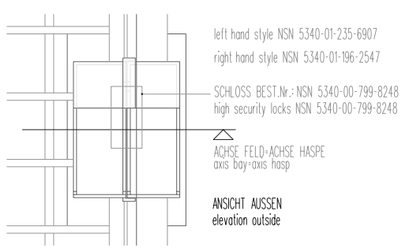

B A23 A24 DETAIL 1:5
DETAIL

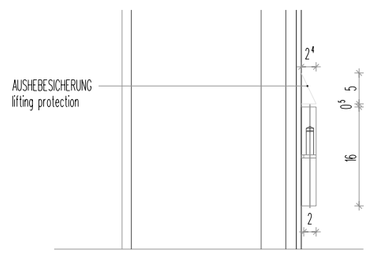

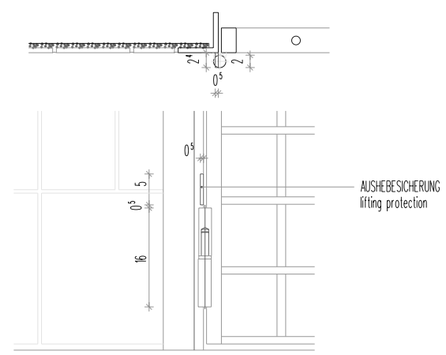

A A23 A24 DETAIL 1:5
DETAIL

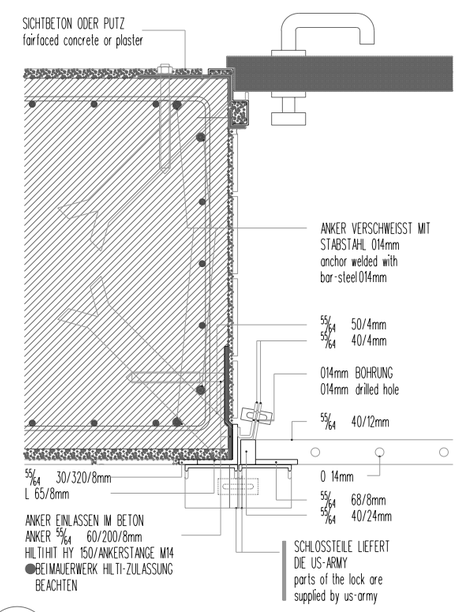

3 A23 A24 DETAIL 1:5
DETAIL

SYMBOL	DESCRIPTION	DATE	APPROVED

DESIGNED BY: LEO LUCERO
DATE: AUGUST 2001
DWN BY: LEO LUCERO
SUBMITTED BY:
CHK BY:
FILE NO: a5246a05.dgn

ENGINEERING TEAM

EUROPE DISTRICT
U.S. ARMY CORPS OF ENGINEERS
APO AE 09096

BARRACKS MODERNIZATION, BUILDING 4026
CAMBRAI FRITSCH KASERNE, DARMSTADT

ARMS ROOM DETAILS
WAFFENRAUM DETAILS

SHEET REFERENCE NUMBER:
A24