ABBREVIATIONS
ABKURZUNGEN

GB - GRAB BAR
GRIFFSTANGE
MC - MEDICINE CABINET
SPIEGELSHRANK
MR - MIRROR WITH DEPOSIT SHELF
SPIEGEL MIT REGEL
SB - SPONGE BASKET
SCHWAMMKORB
SD - SOAP DISH
SEIFENHALTER
TB - TOWEL BAR
BADETUCHHALTER
TBH - TOILET BRUSH HOLDER
BURSTENHALTER
TP - TOILET PAPER HOLDER
TOILETTENPAPIERHALTER
WCH - WASHCLOTH HOOK
HAKEN
WH - WALL HOOK
HAKEN

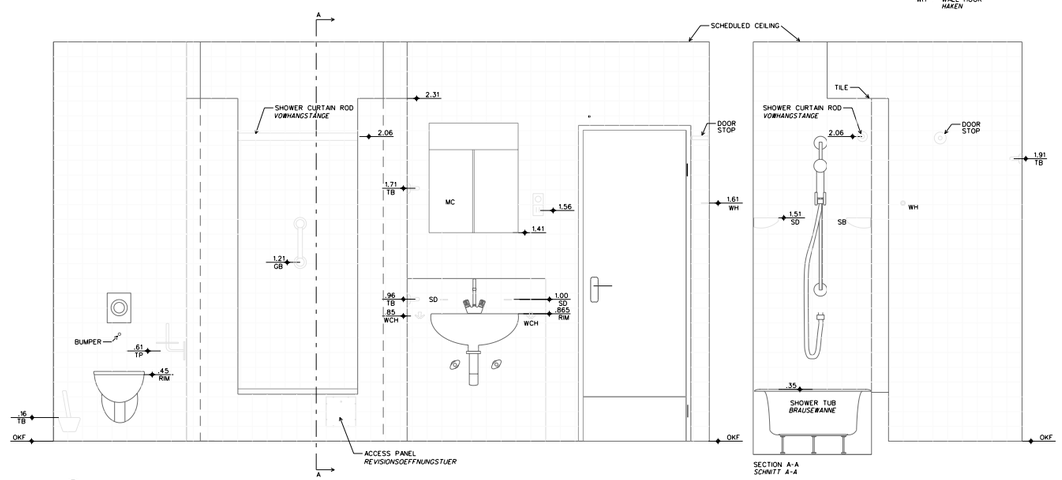

1 A26/A26 A23 BATHROOM DETAIL
BADENZIMMER DETAIL

1:10

A26

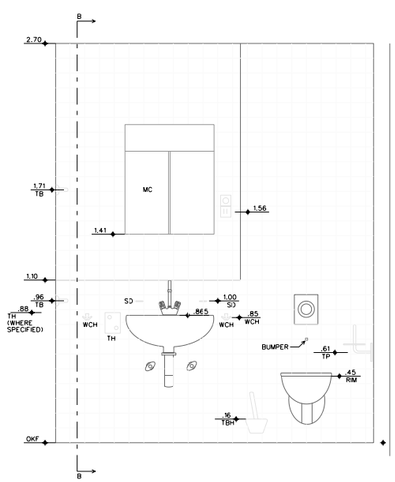

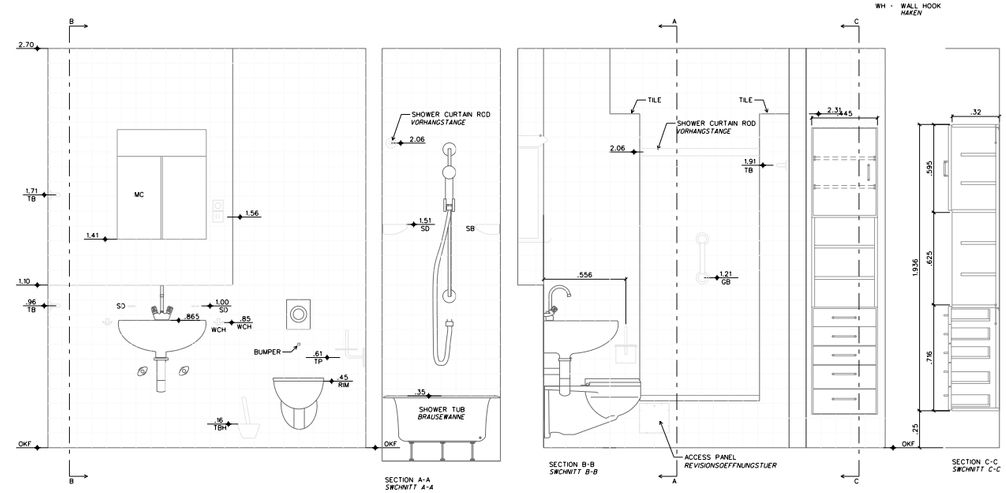

1 A26/A25 BATHROOM DETAIL
BADENZIMMER DETAIL

1:10

ABBREVIATIONS
ABKURZUNGEN

GB - GRAB BAR
GRIFFSTANGE
MC - MEDICINE CABINET
SPIEGELSHRANK
MR - MIRROR WITH DEPOSIT SHELF
SPIEGEL MIT REGEL
SB - SPONGE BASKET
SCHWAMMKORB
SD - SOAP DISH
SEIFENHALTER
TB - TOWEL BAR
BADETUCHHALTER
TBH - TOILET BRUSH HOLDER
BURSTENHALTER
TP - TOILET PAPER HOLDER
TOILETTENPAPIERHALTER
WCH - WASHCLOTH HOOK
HAKEN
WH - WALL HOOK
HAKEN

SYMBOL	DESCRIPTION	DATE APPROVED

DATE: AUGUST 2001
DESIGNED BY: LEE LUCERO
DRAWN BY: LEE LUCERO
SUBMITTED BY: LEE LUCERO
CHK BY: LEE LUCERO
FILE NO: ncobath.dgn

ENGINEERING TEAM
CORPS DISTRICT
U.S. ARMY CORPS OF ENGINEERS
WVD-AE 30606

BARRACKS MODERNIZATION, BUILDING A026
CAMBRAI-FRITSCH KASERNE, DARMSTADT

INTERIOR ELEVATIONS
INNENANSICHTEN

SHEET REFERENCE NUMBER:
A25

ncobath.dgn

INTERIOR ELEVATIONS
INNENANSICHTEN