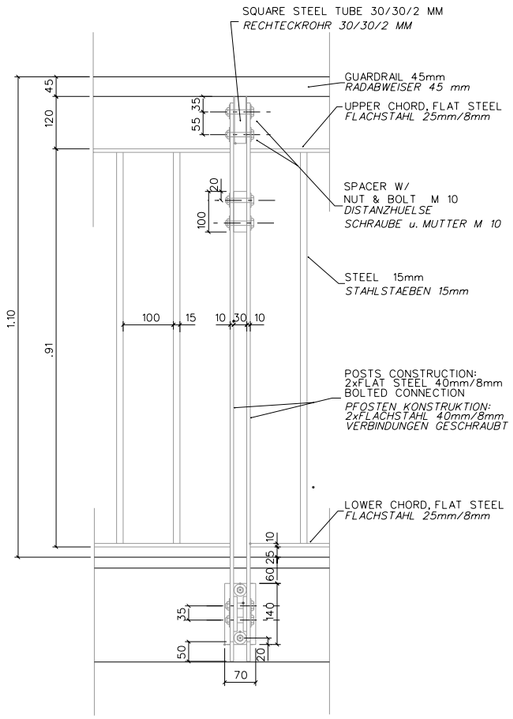

2 A32A32 STAIR DETAIL NOT TO SCALE
TREPPENDETAIL

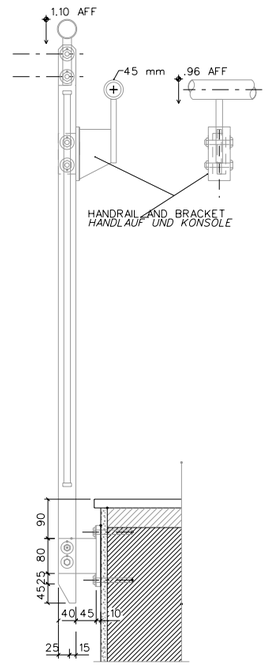

3 A32A32 STAIR DETAIL NOT TO SCALE
TREPPENDETAIL

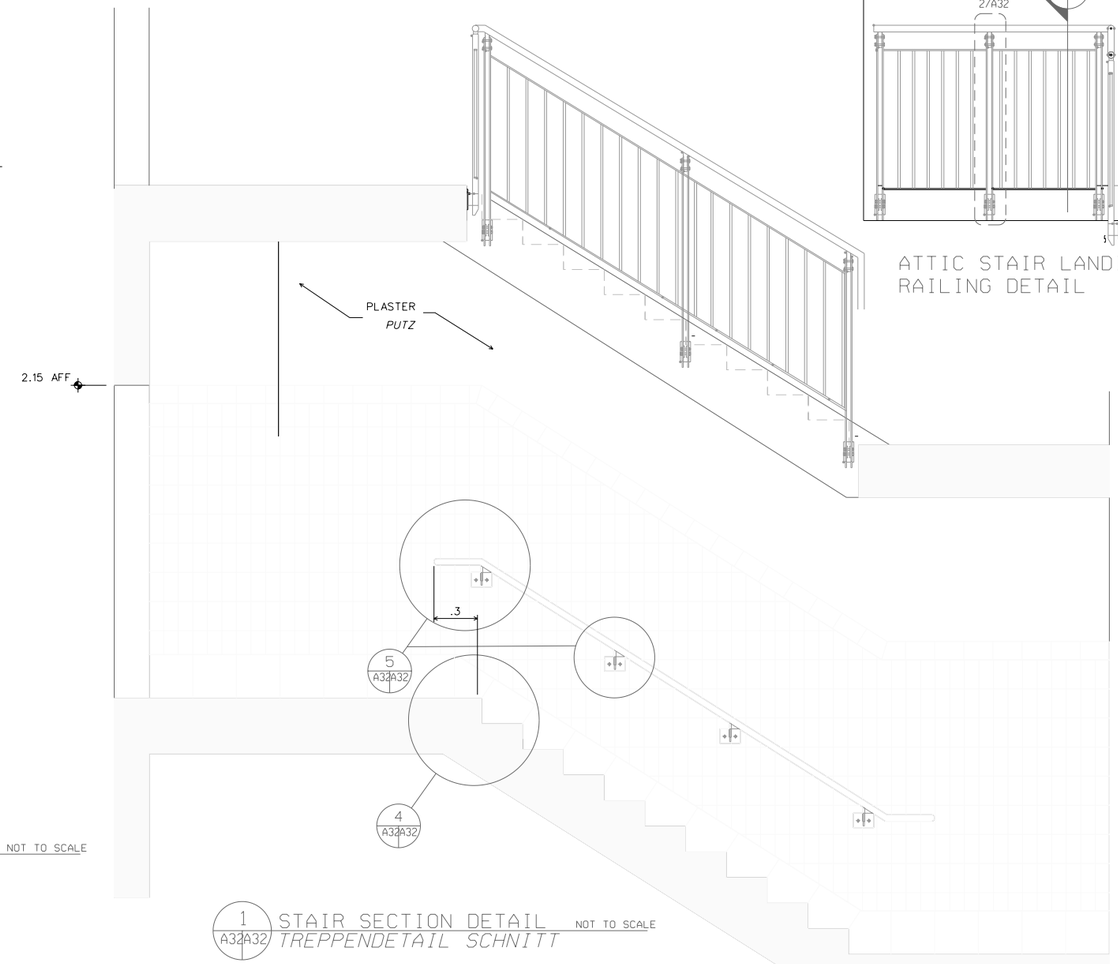

1 A32A32 STAIR SECTION DETAIL NOT TO SCALE
TREPPENDETAIL SCHNITT

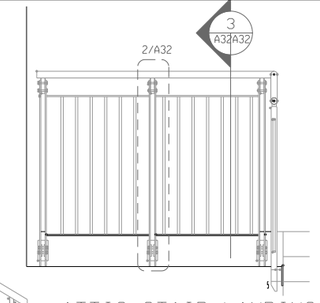

ATTIC STAIR LANDING
RAILING DETAIL

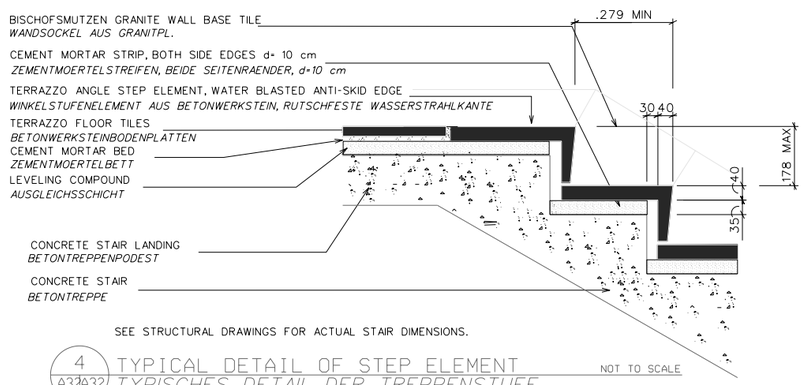

SEE STRUCTURAL DRAWINGS FOR ACTUAL STAIR DIMENSIONS.

4 A32A32 TYPICAL DETAIL OF STEP ELEMENT NOT TO SCALE
TYPISCHES DETAIL DER TREPPENSTUFE

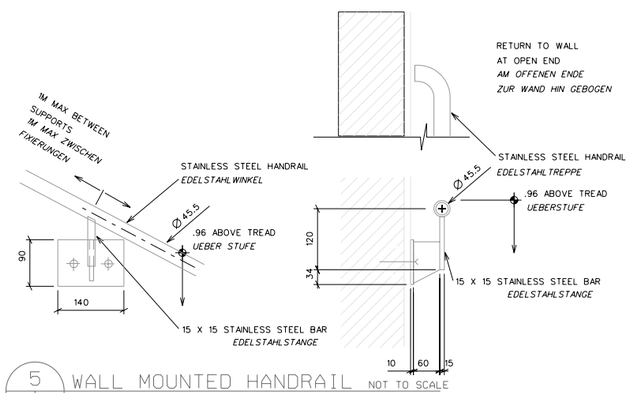

5 A32A32 WALL MOUNTED HANDRAIL NOT TO SCALE
HANDLAUF WANDKONSOLE DETAIL

SYMBOL	DESCRIPTION	DATE	APPROVED

DESIGNED BY: LEO LUCERO
DWN BY: LEO LUCERO
CHK BY:
DATE: AUGUST 2001
SUBMITTED BY:
FILE NO: a329dsd5.dgn

ENGINEERING TEAM
EUROPE DISTRICT
U.S. ARMY CORPS OF ENGINEERS
APO AE 09096

BARRACKS MODERNIZATION, BUILDING 4026
CAMBRAI FRITSCH KASERNE, DARMSTADT

STAIR DETAILS
TREPPENDETAILS

SHEET REFERENCE NUMBER:
A32