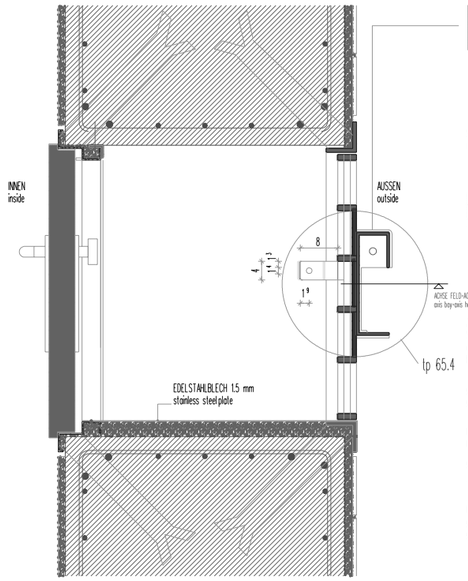

tp65.1 SCHNITT B-B (PLAN F3 064 00G/A64) M. 1:5
GITTERFENSTER
section B-B (DRAWING F3 064 00G/A64)
grid window

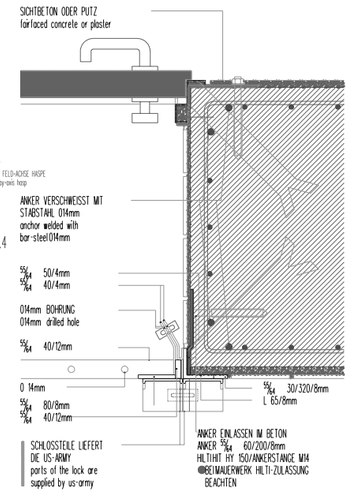

SCHNITT D-D (PLAN F3 064 00G/A64) M. 1:5
GITTERFENSTER/SICHERHEITSLADEN
section D-D (DRAWING F3 064 00G/A64)
grid window/security shutter

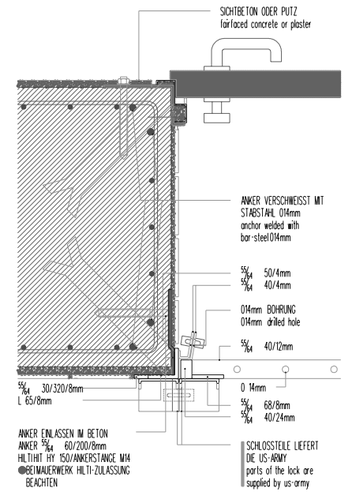

SCHNITT C-C (PLAN F3 064 00G/A64) M. 1:5
GITTERT+R/SICHERHEITST+R
section C-C (DRAWING F3 064 00G/A64)
grid door/security door

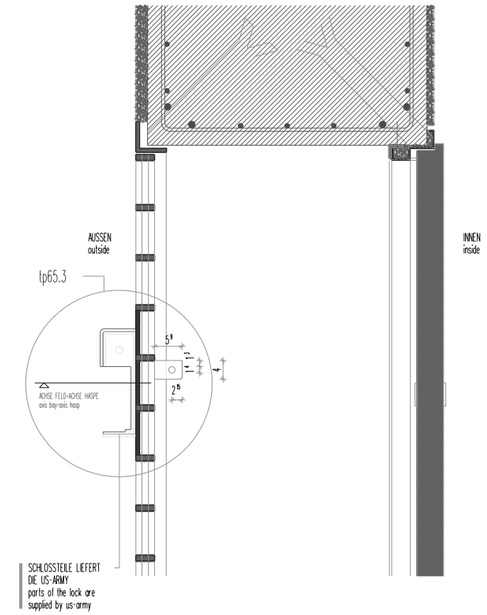

tp65.2 SCHNITT A-A (PLAN F3 064 00G/A64) M. 1:5
GITTERT+R
section A-A (DRAWING F3 064 00G/A64)
grid door

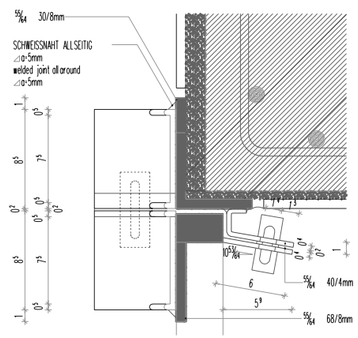

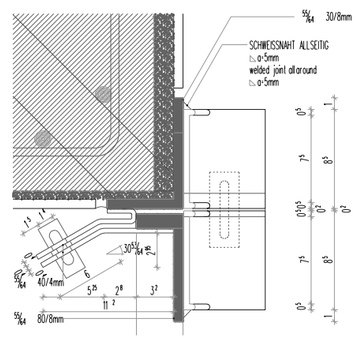

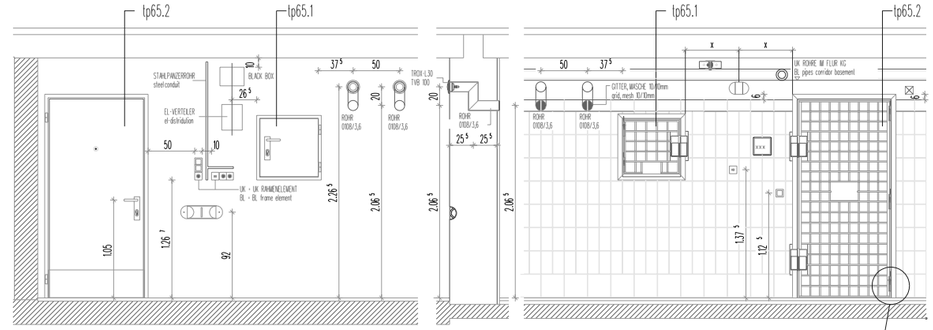

tp 65.5 ZULUFT FLUR M. 1:25
supply air corridor

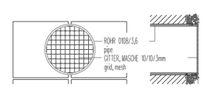

GITTER ZULUFT FLURWAND M. 1:5
grid supply air corridor wall

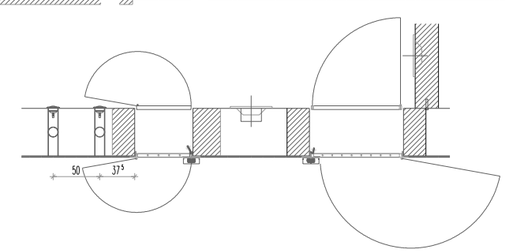

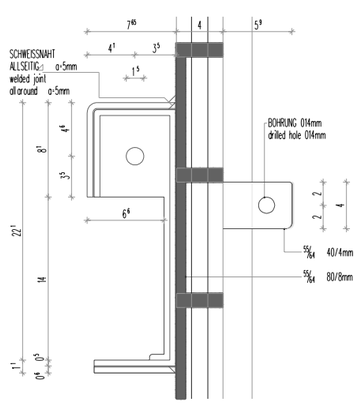

tp65.3 ANSICHT HASPE GITTERT+R M. 1:2
elevation hasp grid door

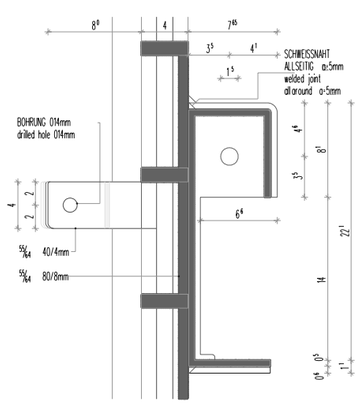

tp65.4 SCHNITT HASPE GITTERFENSTER M. 1:2
section hasp grid window

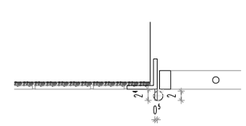
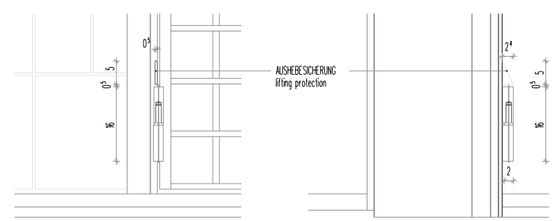
tp65.6 ANSCHWEISSBAND M. 1:5
welded hinge