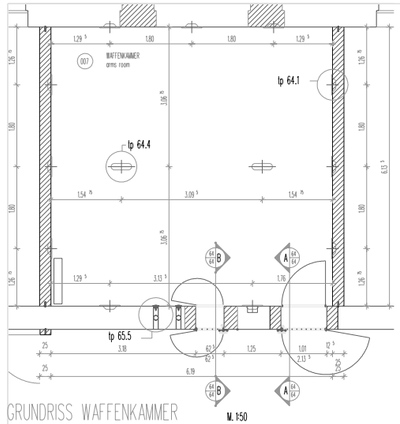

GRUNDRISS WAFFENKAMMER M. 1:50
floor plan arms room

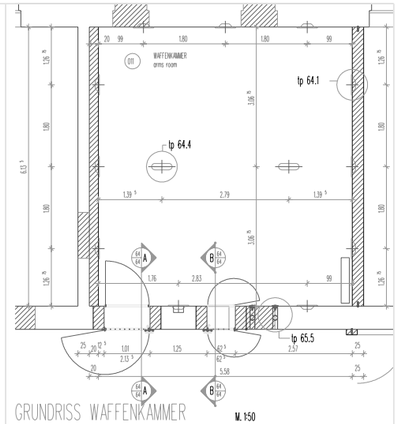

GRUNDRISS WAFFENKAMMER M. 1:50
floor plan arms room

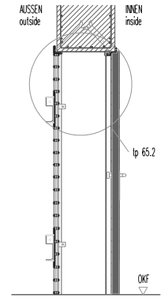

SCHNITT A-A M. 1:20
SICHERHEITST*R/GITTERT*R
section A-A
security door/grid door

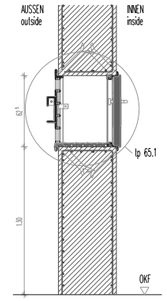

SCHNITT B-B M. 1:20
SICHERHEITSLADEN/GITTERFENSTER
section B-B
security window/grid window

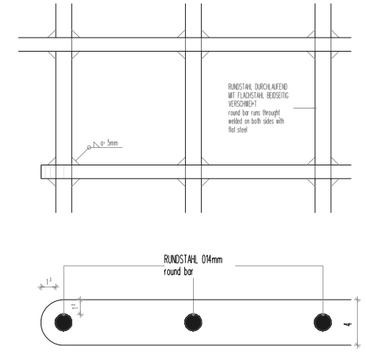

tp 64.2 M. 1:2

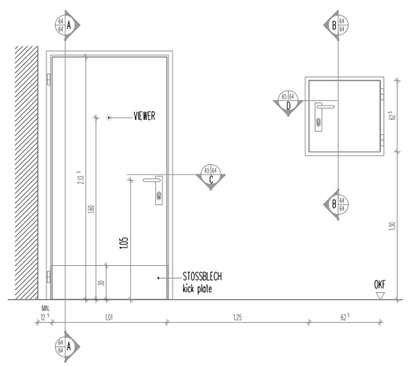

SICHERHEITSLADEN/SICHERHEITST*R - INNENANSICHT M. 1:20
security shutter/security door - interior elevation
z.B. TYP HODAPP MZ1-M4/SF-ET3

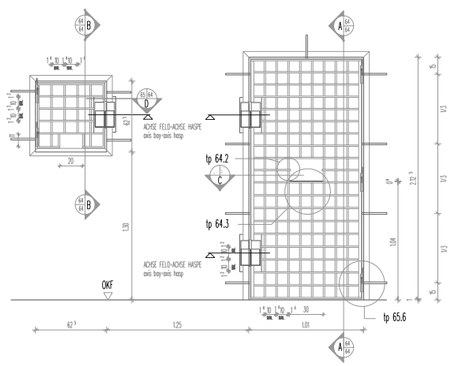

GITTERFENSTER/GITTERT*R - AUSSENANSICHT M. 1:20
grid window/grid door - exterior elevation

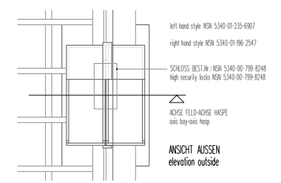

HASPE M. 1:5
hasp

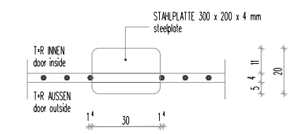

tp 64.3 M. 1:10

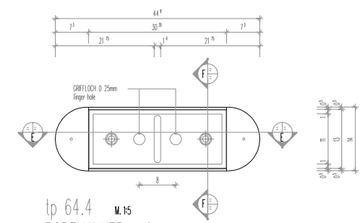

tp 64.4 M. 1:5
BODENANKER - floor anchor

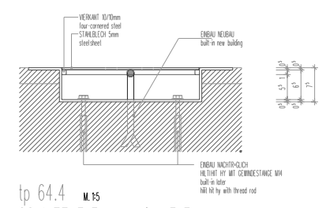

tp 64.4 M. 1:5
SCHNITT E-E - section E-E
EINBAU - NEUBAU UND NACHTR*GLICH
built-in - new building and later

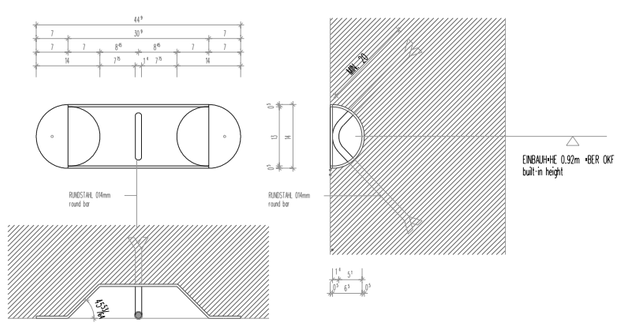

tp 64.1 M. 1:5
ANKER/EINBAU IN BETONWAND (NEUBAU)
anchor/built-in concrete wall(new building)

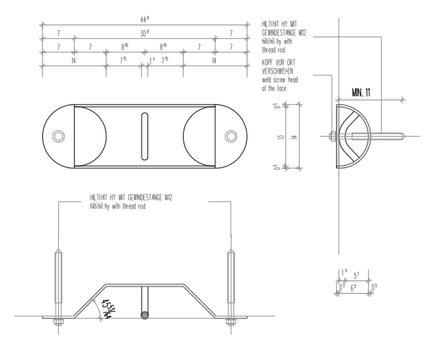

tp 64.1 M. 1:5
ANKER / EINBAU NACHTR*GLICH
anchor / built-in later

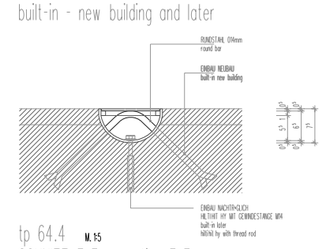

tp 64.4 M. 1:5
SCHNITT F-F - section F-F
EINBAU - NEUBAU UND NACHTR*GLICH
built-in - new building and later